Limits of Sheet Metal Curbs in Seismic Applications

Introduction

In order to understand the limitations of sheet metal curbs in seismic applications, a review of how forces are transferred through the curb, which is covered in detail in Document 6.2.3, is in order. This discussion will evolve around curbs that have a rectangular plan view as shown in Figure 6.2.5-1. The sides of the curb will be designated as shown in Figure 6.2.5-1. The inside length of the curb is designated L_a. The inside width of the curb is given the designation L_b.

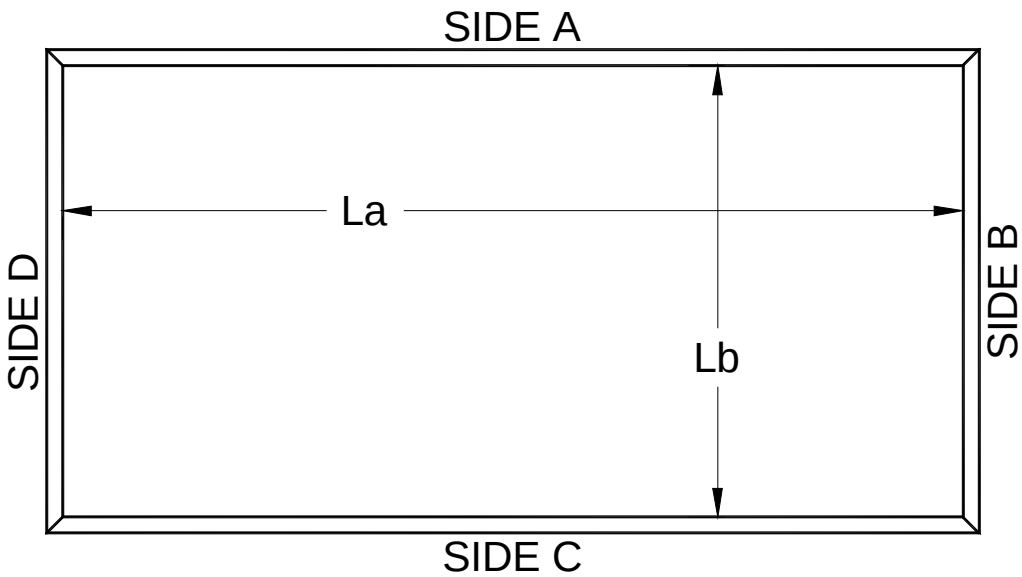

Figure 6.2.5-1. Plan View of a Rectangular Sheet Metal Curb.

An elevation view of any one of the curb side walls is shown in Figure 6.2.5-2. In this figure, ***H*** is the height of the curb side wall. The thickness of the curb wall material is designated as ***t***. The term ***w*** is the distributed weight of the equipment. It is shown as an even distribution; however, it may be an increasing quantity from one side to the other. The horizontal applied seismic and/or wind load is designated as ***f***. Again, ***f*** is shown as an evenly distributed load, although it may also be increasing from one side of the curb to the other. These loads must be carried in the plane of the curb wall. Loads that are perpendicular to the plane of the curb wall will lead to premature buckling of the curb wall.

Curb Side Wall Weight Bearing Limit

The primary failure mode for the curb side walls is buckling. Buckling is a very dangerous

KINETICS Noise Control
DUBLIN, OHIO, USA • MISSISSAUGA, ONTARIO, CANADA
Toll Free (USA only): 800-959-1229
International: 614-889-0480
Fax: 614-889-0540
World Wide Web: www.kineticsnoise.com
Email: sales@kineticsnoise.com

Kinetics Noise Control ©2003

failure mode. It is a geometry-related failure, it occurs in regions of compression loading, and always occurs at a stress that is much lower than the yield stress of the material. Structures that have at least one cross-sectional dimension that is small compared to the length or height dimension are candidates for a buckling type-failure. If one side wall

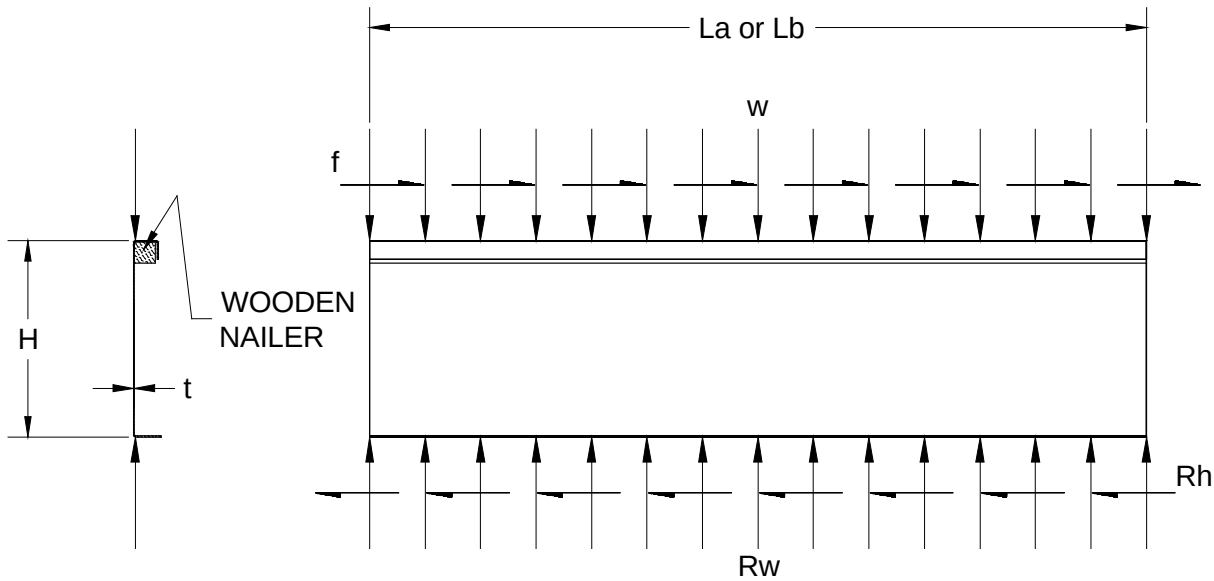

Figure 6.2.5-2. Typical Curb Side Wall Elevation View.

buckle, the adjacent side walls may not be able to carry the additional load and may fail as well. Thus, buckling, when it occurs, is a catastrophic failure. We cannot predict the exact load at which buckling will occur. We can only predict a load above which buckling ***may*** occur in a perfect curb side wall. The actual buckling limit may be much lower due to dents and imperfections in the curb side walls.

Table 6.2.5-1 presents the allowable distributed weight load, w_A', that may be applied to a curb side wall as a function of the curb height, ***H***, and the curb wall thickness, ***t***. This table is base on Table 6.2.3-1, and is expanded to include 12 gage sheet steel for the curb side walls. The allowable distributed weight load, w_A', includes a factor of safety of 2:1. As an initial check on the suitability of using a sheet metal curb with the specified piece of equipment, compute an average distributed weight load for the equipment assuming that the equipment C.G. is located in the geometric center of the equipment. Equation 6.2.5-1

$$w = W/[2*(L_a+L_b)] \qquad \textbf{(Eq. 6.2.5-1)}$$

provides an estimate for the distributed weight loading for an application. An example of how this equation may be used in conjunction with Table 6.2.5-1 to determine the proper specifications for a curb to carry a given piece of equipment is presented. In Equation 6.2.5-1 ***W*** is the total weight of the equipment supported by the curb.

KINETICS Noise Control
DUBLIN, OHIO, USA • MISSISSAUGA, ONTARIO, CANADA
Toll Free (USA only): 800-959-1229
International: 614-889-0480
Fax: 614-889-0540
World Wide Web: www.kineticsnoise.com
Email: sales@kineticsnoise.com

Kinetics Noise Control ©2003

Table 6.2.5-1; Allowable Vertical Curb Wall Loading (w_A') (lb/in)

CURB WALL	18 GAGE	16 GAGE	14 GAGE	12 GAGE	10 GAGE
t (in.)	0.0478	0.0598	0.0747	0.1046	0.1345
H (in.)					
6.0	41.1	80.5	157	431	916
9.0	18.3	35.8	69.8	192	407
12.0	10.3	20.1	39.2	108	229
14.0	7.55	14.8	28.8	79.2	168
15.0	6.58	12.9	25.1	69.0	147
18.0	4.57	8.95	17.4	47.9	102
21.0	3.36	6.57	12.8	35.2	74.8
24.0	2.57	5.03	9.81	26.9	57.3
30.0	1.65	3.22	6.28	17.2	36.7
36.0	1.14	2.24	4.36	12.0	25.5

Example No. 1:

W = 14,000 lbs.
L_a = 375 in.
L_b = 99 in.

w = 14,000/[2*(375+99)] = <u>14.8 lb/in</u>

If, H = 14 in., and the application is for a non-essential facility in a low seismic area, the minimum curb wall must be 16 gage commercial quality sheet steel. If the application is for an essential facility, or a medium to high seismic area, then the minimum curb wall should be 14 gage commercial quality sheet steel.

If, H = 24 in., and the application falls into any facility and any seismic area, the minimum curb wall must be 12 gage commercial quality sheet steel.

The preceding example clearly shows that care must be used in selecting a sheet metal

KINETICS Noise Control
DUBLIN, OHIO, USA • MISSISSAUGA, ONTARIO, CANADA
Toll Free (USA only): 800-959-1229
International: 614-889-0480
Fax: 614-889-0540
World Wide Web: www.kineticsnoise.com
Email: sales@kineticsnoise.com

Kinetics Noise Control ©2003

curb for any application. The example did not consider a piece of equipment where the C.G. was offset from the geometric center of the equipment by a significant amount, or a curb that has a large opening cut in the side wall to accommodate ductwork. The offset C.G. will lead to a non-uniform weight distribution and a concentration of load on one side or in one corner. If the C.G. is offset from the geometric center of the equipment by more than 5% of the length or width, then a detailed analysis must be done to ensure that local buckling is not an issue. Holes cut in the curb side walls drastically reduce the load-bearing capacity of the curb, and must be taken into account. The length of the curb side wall affected by the opening must be subtracted from the length of the curb side wall. Then, for the curb side wall with the duct opening, the result of Equation 6.2.5-1 may be modified for the side with the duct opening as follows for the long sides of the curb.

$$w_a = w*[L_a/(L_a-L_d)] \qquad \textbf{(Eq. 6.2.5-2)}$$

And, for the short sides of the curb, the modification is given below.

$$w_b = w*[L_b/(L_b-L_d)] \qquad \textbf{(Eq. 6.2.5-3)}$$

In Equations 6.2.5-2 and 6.2.5-3 w_a and w_b are the distributed weight loads on the long and short sides of the curb, respectively, when a duct opening is present in the curb side wall. The term L_d represents the length of the duct opening in the curb side wall. Example No. 2 demonstrates how the presence of a duct opening can affect the load-bearing capacity of a sheet metal curb.

Example No. 2:

W = 14,000 lbs.
L_a = 375 in.
L_b = 99 in.
L_d = 24 in. The duct opening is in the short sides.

w = 14,000/[2*(375+99)] = <u>14.8 lb/in</u>

w_b = 14.8*[99/(99-24)] = <u>19.5 lb/in</u>

If, H = 14 in., and the application is for a non-essential facility in a low seismic area, the minimum curb wall for the side with the duct opening must be 14 gage commercial quality sheet steel. If the application is for an essential facility, or a medium to high seismic area, then the minimum curb wall should be 12 gage commercial quality sheet steel.

When a duct opening is present, the curb wall with the opening will need to be made from heavier gage sheet steel than the curb walls without the duct opening.

KINETICS Noise Control
DUBLIN, OHIO, USA • MISSISSAUGA, ONTARIO, CANADA
Toll Free (USA only): 800-959-1229
International: 614-889-0480
Fax: 614-889-0540
World Wide Web: www.kineticsnoise.com
Email: sales@kineticsnoise.com

Kinetics Noise Control ©2003

Curb Side Wall Horizontal Seismic and Wind Load Bearing Capacity

As with the weight bearing limit, the horizontal seismic and wind load bearing limit of the curb side walls will be dependent upon the buckling limit of the curb walls. The shearing loads enter the walls at the top of the curb and exit at the bottom. They remain in the plane of the curb side wall. Thus, only horizontal loads that are parallel to the curb walls will be carried by those walls. This is demonstrated in the curb plane view shown in Figure 6.2.5-3.

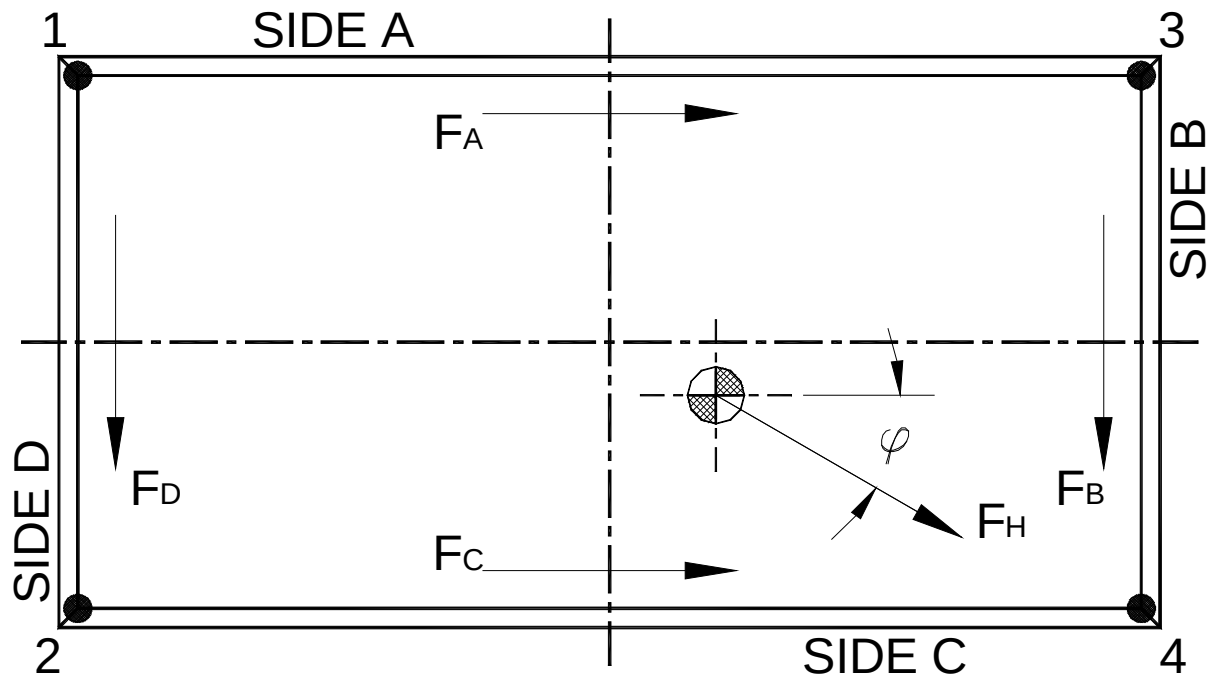

Figure 6.2.5-3. General Horizontal Load Distribution to the Curb Walls.

In Figure 6.2.5-3, the horizontal seismic and/or wind load, F_H, will be distributed into the four curb side walls. In the absence of evidence to the contrary, it is reasonable to assume the following:

$$F_A = F_C = F_H * \cos\varphi \qquad \textbf{(Eq. 6.2.5-4)}$$

and

$$F_B = F_D = F_H * \sin\varphi \qquad \textbf{(Eq. 6.2.5-5)}$$

The allowable horizontal seismic and wind loadings for various curb side wall material gages and curb heights are given in Tables 6.2.5-2 through 6.2.5-6. These are values

KINETICS Noise Control
DUBLIN, OHIO, USA • MISSISSAUGA, ONTARIO, CANADA
Toll Free (USA only): 800-959-1229
International: 614-889-0480
Fax: 614-889-0540
World Wide Web: www.kineticsnoise.com
Email: sales@kineticsnoise.com

Kinetics Noise Control ©2003

based on the critical buckling shear load for the curb side walls. The allowable loads given in Tables 6.2.5-2 through 6.2.5-6 have a factor of safety of 2:1 with respect to the critical buckling load built into them. In these tables, $\dot{w}$ is the maximum allowable vertical load with no shear load applied.

Since the horizontal load enters the curb as a distributed load, the horizontal load that may be resisted by a curb side wall will depend on its length. Thus, the shorter the curb wall, the less its capacity to resist a horizontal seismic and/or wind load. The worst possible seismic and/or wind load case for a sheet metal curb would be where the horizontal load was parallel to the two short sides of the curb as illustrated in Figure 6.2.5-4.

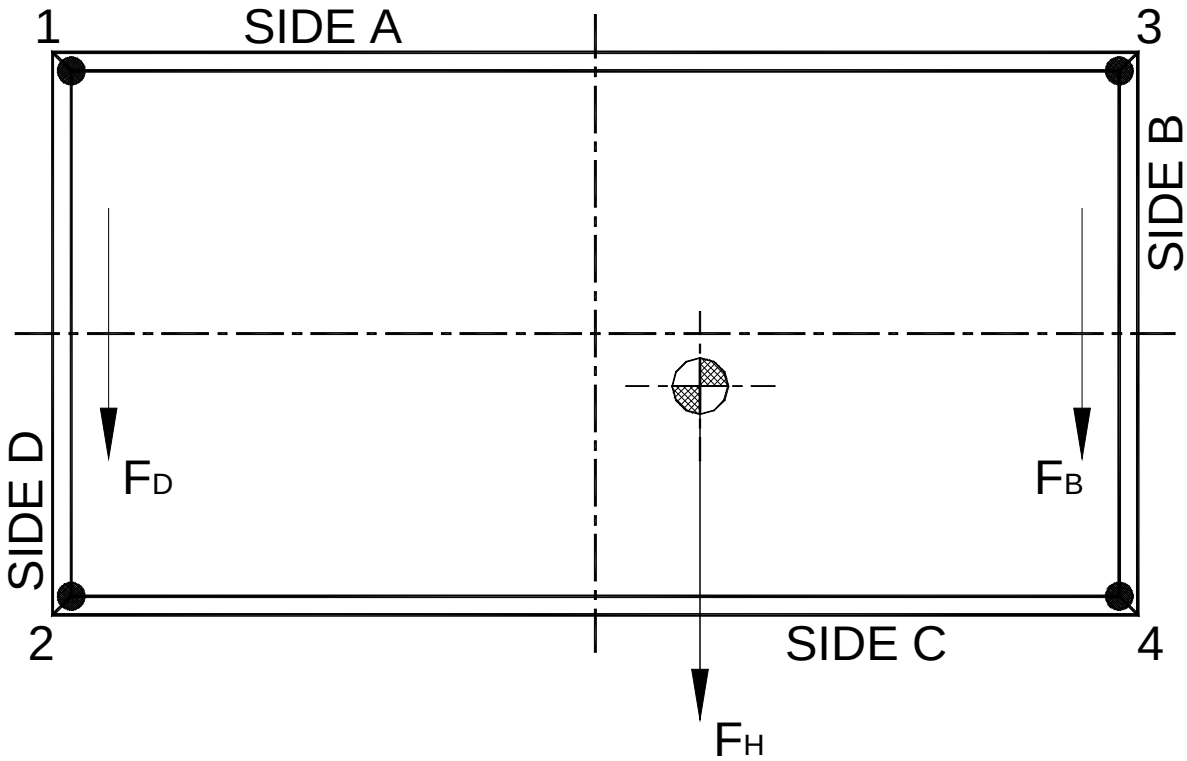

Figure 6.2.5-4. Worst-Case Horizontal Load Distribution to the Curb Walls.

For this worst-case loading the force balance will give the following relationship.

$$F_H = F_B + F_D \qquad \textbf{(Eq. 6.2.5-6)}$$

For the purpose of determining the suitability of a particular curb for a given application, it will be convenient to assume that

KINETICS Noise Control
DUBLIN, OHIO, USA • MISSISSAUGA, ONTARIO, CANADA
Toll Free (USA only): 800-959-1229
International: 614-889-0480
Fax: 614-889-0540
World Wide Web: www.kineticsnoise.com
Email: sales@kineticsnoise.com

Kinetics Noise Control ©2003

$$F = F_B = F_D = F_H/2 \qquad \text{(Eq. 6.2.5-7)}$$

The distributed load applied to the short side walls of the curb, ***f***, will be as follows:

$$f = F_H/(2*L_b) \qquad \text{(Eq. 6.2.5-8)}$$

The actual value for F_H will be determined through the application of the building code in force for the project. Example No. 3 will illustrated the application of Tables 6.2.5-1 through 6.2.5-6.

Example No. 3:

***W* = 2,000 lbs.**
L_a **= 115 in.**
L_b **= 45 in.**
***H* = 24 in.**

***w* = 2,000/[2*(150+50)] = <u>5.00 lb/in</u>**

For an un-reinforced curb wall, the minimum sheet metal for the curb walls will be 16 Gage, see Table 6.2.5-1.

A.) $F_H = 0.50*W$ **(0.5g)**
$F_H = 0.50*2{,}000 = 1{,}000$ **lbs.**

f = 1,000/(2*50) = <u>10.00 lb/in</u>

From Table 6.2.5-3, for w = 5.0 lb/in, f_A' = 25.4 lb/in. This curb will perform well in this application.

B.) $F_H = 1.00*W$ **(1g)**
$F_H = 1.0*2{,}000 = 2{,}000$ **lbs.**

f = 2,000/(2*50) = <u>20.00 lb/in</u>

From Table 6.2.5-3, for w = 5.0 lb/in, f_A' = 25.4 lb/in. This curb will perform well in this application.

KINETICS Noise Control
DUBLIN, OHIO, USA • MISSISSAUGA, ONTARIO, CANADA
Toll Free (USA only): 800-959-1229
International: 614-889-0480
Fax: 614-889-0540
World Wide Web: www.kineticsnoise.com
Email: sales@kineticsnoise.com

Kinetics Noise Control ©2003

C.) F_H **= 1.50*W (1.5g)**
F_H = 1.50*2,000 = 3,000 lbs.

f = 3,000/(2*50) = <u>30.00 lb/in</u>

From Table 6.2.5-3, for w = 5.0 lb/in, f_A' = 25.4 lb/in. In this case, the curb is inadequate. Table 6.2.5-3 also shows that even if the curb side walls were reinforced to carry the equipment weight load, the curb would be inadequate for the proposed seismic application. In order to have a 24 in. high curb in this seismic application, the minimum curb side wall would need to be 14 gage.

Duct openings will drastically reduce the ability of a curb wall to carry a horizontal seismic and/or wind load. In the presence of a duct opening, the load applied to a long side of the curb, f_a, will be given by

$$f_a = f*[L_a/(L_a-L_d)] \qquad \text{(Eq. 6.2.5-2)}$$

In the presence of a duct opening, the load applied to the short side of the curb, f_b, will be

$$f_b = f*[L_b/(L_b-L_d)] \qquad \text{(Eq. 6.2.5-3)}$$

The effects of a duct opening on the seismic load carrying ability of the curb are illustrated in Example No. 4.

Example No. 4:

W = 2,000 lbs.
L_a = 150 in.
L_b = 50 in.
L_d = 25 in. (Duct opening in short curb side.)
H = 24 in.
t = 16 Gage = 0.0598 in. (Curb side wall material thickness.)

w = 2,000/[2*(150+50)] = <u>5.00 lb/in</u>

w_b = 5.00*[50/(50-25)] = <u>10.00 lb/in</u>

F_H = 0.50*W (0.5g)

F_H = 0.50*2,000 = <u>1,000 lbs</u>.

KINETICS Noise Control
DUBLIN, OHIO, USA • MISSISSAUGA, ONTARIO, CANADA
Toll Free (USA only): 800-959-1229
International: 614-889-0480
Fax: 614-889-0540
World Wide Web: www.kineticsnoise.com
Email: sales@kineticsnoise.com

Kinetics Noise Control ©2003

f **= 1,000/(2*50) = <u>10.00 lb/in</u>**

f_b = 10.00*[50/(50-25)] = <u>20.00 lb/in</u>

The presence of a duct opening moves the curb specified in this example from being adequate for a 0.5g application to being inadequate. The curb wall with the duct opening would need to have a minimum material thickness of 14 gage.

The applicability of sheet metal curbs in seismic applications will be limited by many different factors. Each proposed application must be individually assessed to determine its suitability for a seismic or high wind installation. The tables and examples presented in this document will allow the reader to make a rough estimate on the suitability of a sheet metal curb for their application. However, the manufacturer of the curb, or Kinetics Noise Control as the manufacture of the seismic restraints should be consulted for a detailed assessment of the curb and its application. Kinetics Noise Control has developed a generalized analysis of sheet metal curbs based on the buckling strength of the curb side walls. This analysis is used to specify the number of horizontal and vertical restraints required to resist the code-determined loadings. The analysis will also determine whether vertical reinforcement will enhance the application of the curb.

KINETICS Noise Control
DUBLIN, OHIO, USA • MISSISSAUGA, ONTARIO, CANADA

Toll Free (USA only): 800-959-1229
International: 614-889-0480
Fax: 614-889-0540
World Wide Web: www.kineticsnoise.com
Email: sales@kineticsnoise.com

Kinetics Noise Control ©2003

Table 6.2.5-2; Allowable Horizontal Seismic & Wind Curb Wall Loading (f_A') (lb/in)

CURB WALL: 18 GAGE; t = 0.0478 in

---------	w (lb/in	0.0	2.5	5.0	10.0	15.0	25.0	50.0	75.0	150
w' (lb/in)	H (in)									
82.3	6.0	233	231	230	227	224	218	200	170	N/A
36.6	9.0	104	102	101	97.8	94.5	86.4	N/A	N/A	N/A
20.6	12.0	58.3	56.9	55.4	52.0	47.7	N/A	N/A	N/A	N/A
15.1	14.0	42.7	41.3	39.8	35.9	27.6	N/A	N/A	N/A	N/A
13.2	15.0	37.3	35.9	34.4	30.1	N/A	N/A	N/A	N/A	N/A
9.14	18.0	25.9	24.4	22.7	N/A	N/A	N/A	N/A	N/A	N/A
6.71	21.0	19.0	17.5	15.4	N/A	N/A	N/A	N/A	N/A	N/A
5.14	24.0	14.5	13.0	9.87	N/A	N/A	N/A	N/A	N/A	N/A
4.06	27.0	11.5	9.83	N/A	N/A	N/A	N/A	N/A	N/A	N/A
3.29	30.0	9.31	7.50	N/A	N/A	N/A	N/A	N/A	N/A	N/A
2.72	33.0	7.69	5.59	N/A	N/A	N/A	N/A	N/A	N/A	N/A
2.28	36.0	6.45	N/A	N/A	N/A	N/A	N/A	N/A	N/A	N/A

KINETICS Noise Control
DUBLIN, OHIO, USA • MISSISSAUGA, ONTARIO, CANADA
Toll Free (USA only): 800-959-1229
International: 614-889-0480
Fax: 614-889-0540
World Wide Web: www.kineticsnoise.com
Email: sales@kineticsnoise.com

Kinetics Noise Control ©2003

Table 6.2.5-3; Allowable Horizontal Seismic & Wind Curb Wall Loading (f_A') (lb/in)

CURB WALL: 16 GAGE; t = 0.0598 in

---------	w (lb/in)	0.0	2.5	5.0	10.0	15.0	25.0	50.0	75.0	150
w' (lb/in)	H (in)									
161	6.0	455	454	453	450	447	442	426	409	327
71.6	9.0	203	201	200	197	194	188	168	N/A	N/A
40.3	12.0	114	113	111	108	105	97.4	N/A	N/A	N/A
29.6	14.0	83.7	82.4	80.9	77.8	74.3	64.4	N/A	N/A	N/A
25.8	15.0	73.0	71.6	70.2	67.0	63.2	49.9	N/A	N/A	N/A
17.9	18.0	50.6	49.3	47.8	44.2	39.1	N/A	N/A	N/A	N/A
13.1	21.0	37.1	35.7	34.1	29.8	N/A	N/A	N/A	N/A	N/A
10.1	24.0	28.6	27.1	25.4	18.6	N/A	N/A	N/A	N/A	N/A
7.95	27.0	22.5	21.0	19.2	N/A	N/A	N/A	N/A	N/A	N/A
6.44	30.0	18.2	16.7	14.6	N/A	N/A	N/A	N/A	N/A	N/A
5.32	33.0	15.0	13.5	10.7	N/A	N/A	N/A	N/A	N/A	N/A
4.47	36.0	12.6	11.0	N/A	N/A	N/A	N/A	N/A	N/A	N/A

KINETICS Noise Control
DUBLIN, OHIO, USA • MISSISSAUGA, ONTARIO, CANADA
Toll Free (USA only): 800-959-1229
International: 614-889-0480
Fax: 614-889-0540
World Wide Web: www.kineticsnoise.com
Email: sales@kineticsnoise.com

Kinetics Noise Control ©2003

Table 6.2.5-4; Allowable Horizontal Seismic & Wind Curb Wall Loading (f_A') (lb/in)

CURB WALL: 14 GAGE; t = 0.0747 in

---------	w (lb/in)	0.0	2.5	5.0	10.0	15.0	25.0	50.0	75.0	150
w' (lb/in)	H (in)									
314	6.0	888	887	885	883	880	875	860	846	795
140	9.0	396	395	393	391	388	382	366	348	N/A
78.5	12.0	222	221	219	217	214	207	189	155	N/A
57.7	14.0	163	162	160	158	155	148	124	N/A	N/A
50.2	15.0	142	141	139	136	133	126	90.6	N/A	N/A
34.9	18.0	98.7	97.4	96.0	92.9	89.6	81.2	N/A	N/A	N/A
25.6	21.0	72.4	71.0	69.6	66.4	62.6	48.8	N/A	N/A	N/A
19.6	24.0	55.4	54.1	52.6	49.2	44.6	N/A	N/A	N/A	N/A
15.5	27.0	43.8	42.5	40.9	37.1	30.0	N/A	N/A	N/A	N/A
12.6	30.0	35.6	34.2	32.6	28.2	N/A	N/A	N/A	N/A	N/A
10.4	33.0	29.4	28.0	26.3	20.3	N/A	N/A	N/A	N/A	N/A
8.72	36.0	24.7	23.2	21.4	N/A	N/A	N/A	N/A	N/A	N/A

KINETICS Noise Control
DUBLIN, OHIO, USA • MISSISSAUGA, ONTARIO, CANADA
Toll Free (USA only): 800-959-1229
International: 614-889-0480
Fax: 614-889-0540
World Wide Web: www.kineticsnoise.com
Email: sales@kineticsnoise.com

Kinetics Noise Control ©2003

Table 6.2.5-5; Allowable Horizontal Seismic & Wind Curb Wall Loading (f_A') (lb/in)

CURB WALL: 12 GAGE; t = 0.1046 in

---------	w (lb/in)	0.0	2.5	5.0	10.0	15.0	25.0	50.0	75.0	150
w' (lb/in)	H (in)									
862	6.0	2,438	2,437	2,435	2,433	2,430	2,425	2,411	2,397	2,355
383	9.0	1,083	1,082	1,081	1,078	1,075	1,070	1,056	1,041	993
215	12.0	608	607	605	603	600	594	580	564	504
158	14.0	447	446	444	441	439	433	418	400	314
138	15.0	390	389	388	385	382	376	361	342	N/A
95.8	18.0	271	270	268	266	263	257	239	216	N/A
70.4	21.0	199	198	196	194	191	184	164	N/A	N/A
53.9	24.0	152	151	150	147	144	137	110	N/A	N/A
42.6	27.0	120	119	118	115	112	104	N/A	N/A	N/A
34.5	30.0	97.6	96.2	94.8	91.8	88.4	80.0	N/A	N/A	N/A
28.5	33.0	80.6	79.3	77.8	74.7	71.1	60.6	N/A	N/A	N/A
23.9	36.0	67.6	66.2	64.8	61.5	57.6	N/A	N/A	N/A	N/A

KINETICS Noise Control
DUBLIN, OHIO, USA • MISSISSAUGA, ONTARIO, CANADA
Toll Free (USA only): 800-959-1229
International: 614-889-0480
Fax: 614-889-0540
World Wide Web: www.kineticsnoise.com
Email: sales@kineticsnoise.com

Kinetics Noise Control ©2003

Table 6.2.5-6; Allowable Horizontal Seismic & Wind Curb Wall Loading (f_A') (lb/in)

CURB WALL: 10 GAGE; t = 0.1345 in

---------	w (lb/in)	0.0	2.5	5.0	10.0	15.0	25.0	50.0	75.0	150
w' (lb/in)	H (in)									
1,833	6.0	5,185	5,183	5,182	5,179	5,177	5,171	5,158	5,144	5,103
814	9.0	2,302	2,301	2,300	2,297	2,294	2,289	2,275	2,262	2,219
458	12.0	1,295	1,294	1,293	1,290	1,287	1,282	1,268	1,254	1,208
337	14.0	953	952	951	948	945	940	926	911	861
293	15.0	829	827	826	823	821	815	801	786	734
204	18.0	577	576	574	572	569	563	549	532	471
150	21.0	424	423	422	419	416	410	395	377	260
115	24.0	325	324	323	320	317	311	295	275	N/A
90.5	27.0	256	255	253	251	248	242	224	199	N/A
73.3	30.0	207	206	205	202	199	193	173	N/A	N/A
60.6	33.0	171	170	169	166	163	156	133	N/A	N/A
50.9	36.0	144	143	141	138	135	128	95.9	N/A	N/A

KINETICS Noise Control
DUBLIN, OHIO, USA • MISSISSAUGA, ONTARIO, CANADA
Toll Free (USA only): 800-959-1229
International: 614-889-0480
Fax: 614-889-0540
World Wide Web: www.kineticsnoise.com
Email: sales@kineticsnoise.com

Kinetics Noise Control ©2003